Symbols are based on ANSI/ASHRAE Standard 134-2005, STANDARD Graphic Symbols for Heating, Ventilating, Air-Conditioning, and Refrigerating Systems, American Society of Heating, Refrigerating and Air-Conditioning Engineers

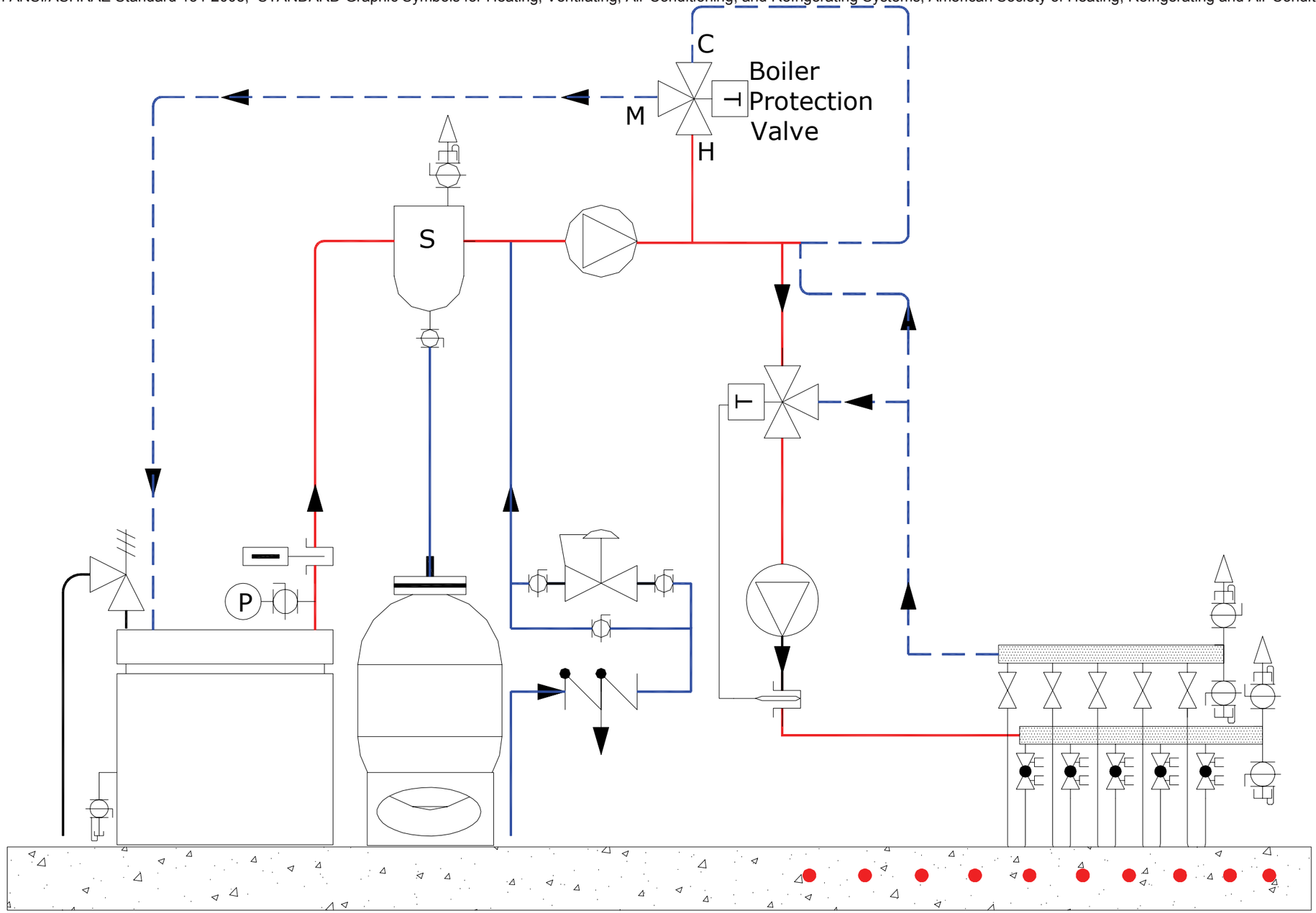

Single Boiler, Direct Return

Space Heating

In exchange for a donation you can have this schematic in a .pdf, .vsd or .dwg format. How do you contribute? Simply click here (http://www.healthyheating.com/ebooks_purchase.htm) to download any ebook of your choice. Email us (Store@healthyheating.com) this code ***SZ3WTMV*** and let us know what format you would like.

Radiant Based HVAC Systems

Basic Radiant Floor Heating System w/ 3 Way Thermostatic Mixing Valve

Materials downloaded from www.healthyheating.com are governed by the legal terms and conditions posted at http://www.healthyheating.com/legal.htm

www.healthyheating.com

Copyright © Robert Bean
All Rights Reserved